Preliminary Datasheet PS25451

EPIC Ultra High Impedance Movement Sensor

Advance Information

Data Sheet 291767 issue 2

FEATURES

- Ultra high effective input resistance, typically 20GΩ.
- Effective input capacitance as low as 15pF.
- Upper 3dB point typically 10kHz.
- Operates with bipolar power supply from ±2.4V to ±5.5V.
- Sensors supplied in a custom package with exposed pins for surface mount assembly.

APPLICATIONS

- Proximity switching of lighting and similar electric circuits
- Remote control of TVs and other domestic appliances
- Presence detection for security / alarm systems
- Room occupancy detection for rescue services
- Simple gesture recognition to control children's toys
- Controller-less computer gaming systems

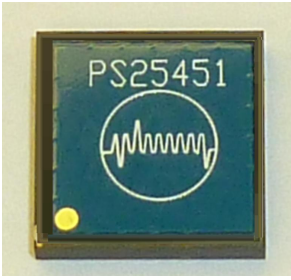

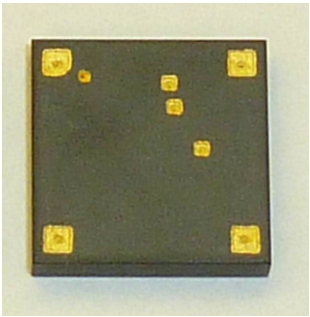

Fig. 1 The PS25451 Sensor Top and Bottom

Ordering Information

PS25451
Custom package

-25°C to +75°C

Plessey Semiconductors Electric Potential Integrated Circuit (EPIC) product line targets a range of applications.

The PS25451 is an ultra high impedance non-contact solid state electric potential sensor. It can be used to detect field disturbance due to the movement of a near-by object. This functionality can be employed in a range of applications including security motion sensors and non-contact electric switches for lighting, door opening, toys etc

The device uses active feedback techniques to both lower the effective input capacitance of the sensing element (Cin) and boost the input resistance (Rin). These techniques are used to realise a sensor with a frequency response suitable for remote sensing applications.

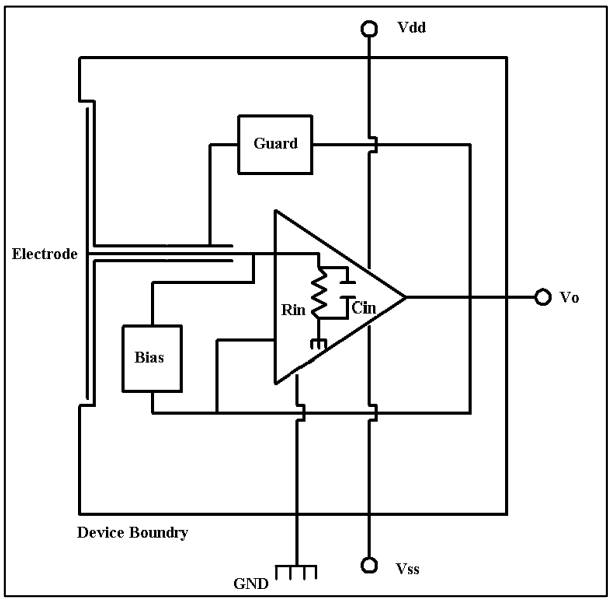

Fig. 2 Internal circuit of EPIC Movement Sensor

Plessey Semiconductors Ltd.
Design & Technology Centre, Delta 500, Delta Business Park, Great Western Way, Swindon, UK SN5 7XE
Tel: +44 1793 518000 Fax: +44 1793 518030 Web: www.plesseysemi.com

ELECTRICAL CHARACTERISTICS

T_{amb} = -25℃ to +75℃,Vdd/Vss ±2.4V to ±5..5V. The electrical characteristics are guaranteed by either production test or by design and characterisation. They apply within the specified ambient temperature and supply voltage unless otherwise stated.

Characteristics	Value			Units	Conditions
	Min.	Typ.	Max.		
Supply voltage	±2.4		±5.5	V	Bipolar supply, Gnd=0V
Supply current	0.6	2.0	3.5	mA	
Effective input resistance		20		GΩ	
Effective input capacitance		15		pF	As measured at the sensor electrode
Primary Output Voltage Gain (Av)	47.5	50	52.5		When measured with 250pF coupling capacitance.
Guard Output voltage gain	0.95	1.0	1.05		@1kHz
Lower -3dB point		0.20		Hz	Set by internal DC signal rejection network – coupling capacitor 250pF
Upper -3dB point	4.0			kHz	

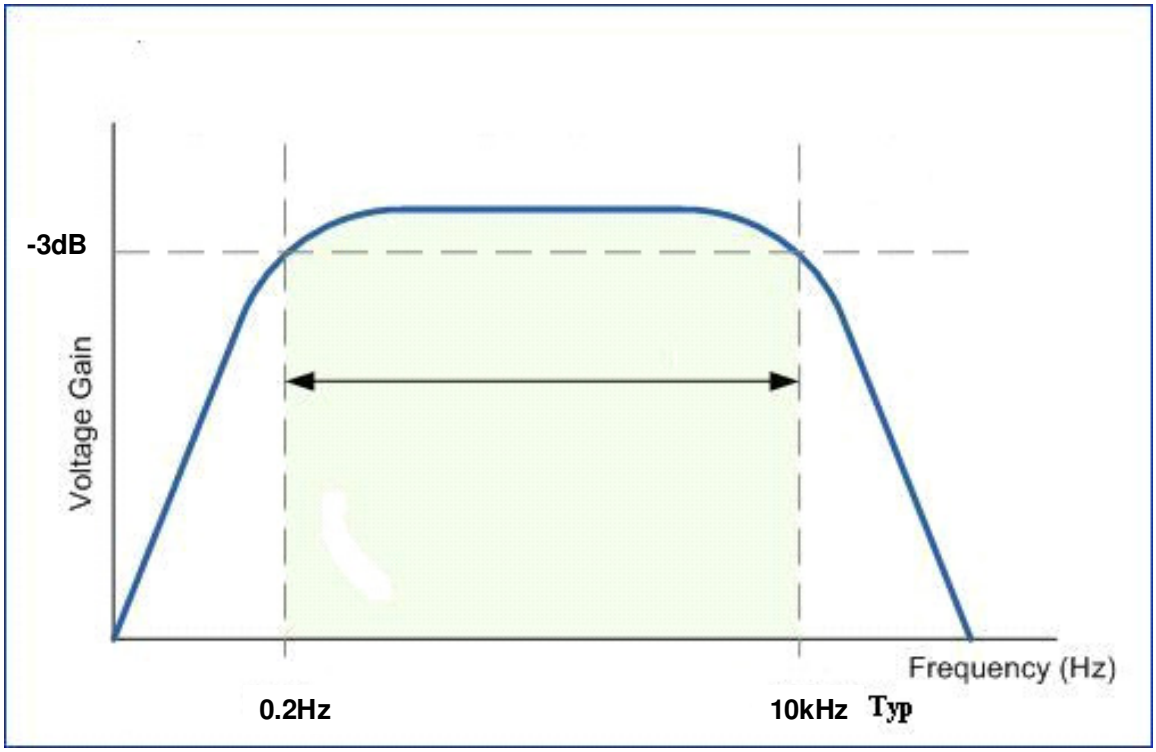

Fig. 3 Typical Bode Plot for PS25451 Sensor with Coupling through 250pF Capacitor

Plessey Semiconductors Ltd.
Design & Technology Centre, Delta 500, Delta Business Park, Great Western Way, Swindon, UK SN5 7XE
Tel: +44 1793 518000 Fax: +44 1793 518030 Web: www.plesseysemi.com

PIN ASSIGNMENT

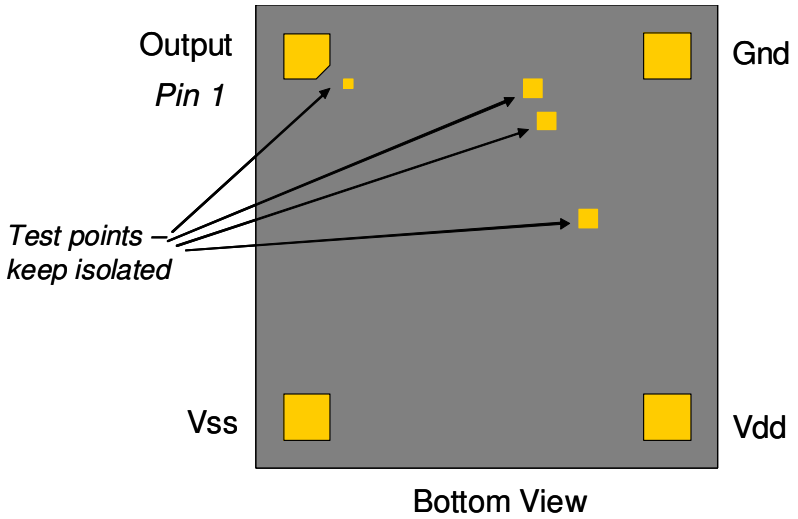

Fig. 4 Pin Assignment for the PS25451

MECHANICAL DIMENSIONS

A preliminary package diagram is shown below. This is certain to change and so should only be used for illustration purposes.

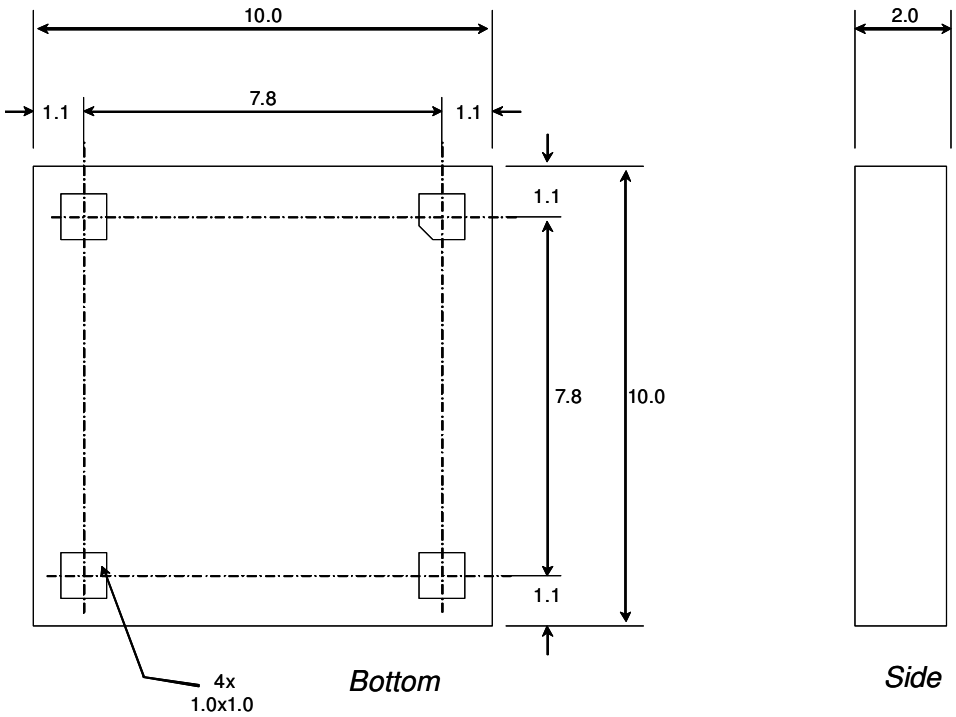

Fig. 5 Mechanical Drawing (all dimensions are nominal and in mm)

Plessey Semiconductors Ltd.
Design & Technology Centre, Delta 500, Delta Business Park, Great Western Way, Swindon, UK SN5 7XE
Tel: +44 1793 518000 Fax: +44 1793 518030 Web: www.plesseysemi.com

ELECTROSTATIC DISCHARGE (ESD) PROTECTION

The PS25451 is manufactured using a high performance analog CMOS process. As for all CMOS components, it is essential that conventional ESD protection protocols be applied for the handling of this device.

PATENTS

This component and many of the associated applications are covered by the following international patents:

602 32 911.6-08 (DE)	EP2174416
AU2007228660	GB1118970.1
CA2646411	JP2009-500908
CN200780026584.8	JP4391823
EP1451595 (CH)	TW097126903
EP1451595 (ES)	TW1308066
EP1451595 (FR)	US12/293872
EP1451595 (IE)	US12/374359
EP1451595 (IT)	US12/669615
EP1451595 (NL)	US13/020890
EP2002273	US13/163988
EP2047284	US7885700

Plessey Semiconductors Ltd.
Design & Technology Centre, Delta 500, Delta Business Park, Great Western Way, Swindon, UK SN5 7XE
Tel: +44 1793 518000 Fax: +44 1793 518030 Web: www.plesseysemi.com

For further information about this and other products, please visit: www.plesseysemiconductors.com

Legal Notice

Product information provided by Plessey Semiconductors Limited ("Plessey") in this document is believed to be correct and accurate. Plessey reserves the right to change/correct the specifications and other data or information relating to products without notice but Plessey accepts no liability for errors that may appear in this document, howsoever occurring, or liability arising from the use or application of any information or data provided herein. Neither the supply of such information, nor the purchase or use of products conveys any licence or permission under patent, copyright, trademark or other intellectual property right of Plessey or third parties.

Products sold by Plessey are subject to its standard Terms and Conditions of Sale that are available on request. No warranty is given that products do not infringe the intellectual property rights of third parties, and furthermore, the use of products in certain ways or in combination with Plessey, or non-Plessey furnished equipments/components may infringe intellectual property rights of Plessey.

The purpose of this document is to provide information only and it may not be used, applied or reproduced (in whole or in part) for any purpose nor be taken as a representation relating to the products in question. No warranty or guarantee express or implied is made concerning the capability, performance or suitability of any product, and information concerning possible applications or methods of use is provided for guidance only and not as a recommendation. The user is solely responsible for determining the performance and suitability of the product in any application and checking that any specification or data it seeks to rely on has not been superseded.

Products are intended for normal commercial applications. For applications requiring unusual environmental requirements, extended temperature range, or high reliability capability (e.g. military, or medical applications), special processing/testing/conditions of sale may be available on application to Plessey.

Data Sheet 291767 issue 2

Plessey Semiconductors Ltd.
Design & Technology Centre, Delta 500, Delta Business Park, Great Western Way, Swindon, UK SN5 7XE
Tel: +44 1793 518000 Fax: +44 1793 518030 Web: www.plesseysemi.com