PS25101
EPIC Ultra High Impedance ECG Sensor
Advance Information

Data Sheet 291346

FEATURES

- Ultra high input resistance, typically $2x10^{10}$ Ω
- Dry-contact capacitive coupling
- Input capacitance as low as 10pF
- Upper -3dB point typically 10kHz
- Lower -3dB point typically 100mHz
- Operates with single +4.75V to 8.0V supply
- Sensors supplied as custom engineered probe assemblies complete with connecting lead and DIN plug termination

Ordering Information

PS25101
Custom package

0°C to +50°C

APPLICATIONS

- Non-critical patient monitoring equipment
- Emergency response diagnostics
- Lifestyle sports and health products
- Suitable for long-term and remote monitoring

Plessey Semiconductors Electric Potential Integrated Circuit (EPIC) product line targets a range of applications.

The PS25101 is an ultra high impedance solid state ECG (electrocardiograph) sensor. It can be used as a dry contact ECG sensor without the need for potentially dangerous low impedance circuits across the heart. The resolution available is as good as or better than conventional wet electrodes.

The device uses active feedback techniques to both lower the effective input capacitance of the sensing element (Cin) and boost the input resistance (Rin). These techniques are used to realise a sensor with a frequency response suitable for both diagnostic and monitoring ECG applications. The total voltage gain of the system is a function of both the input coupling capacitance (variable) and the internal sensor configuration.

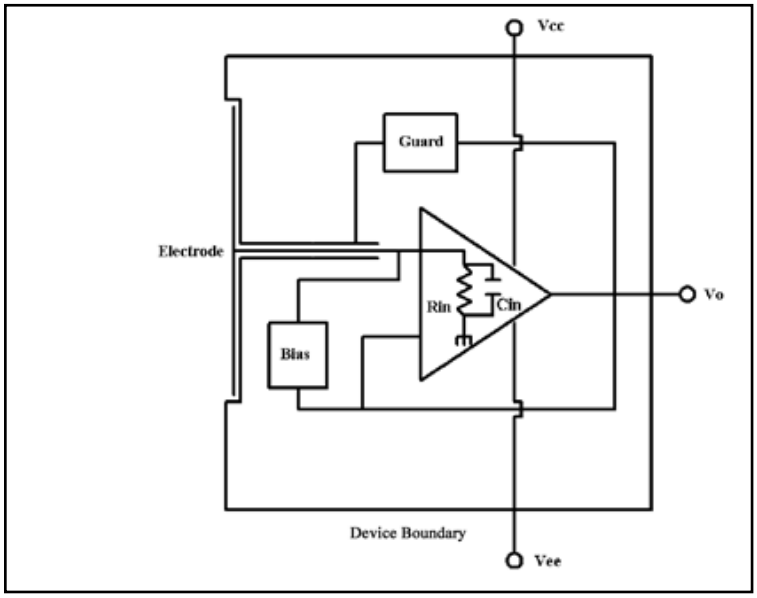

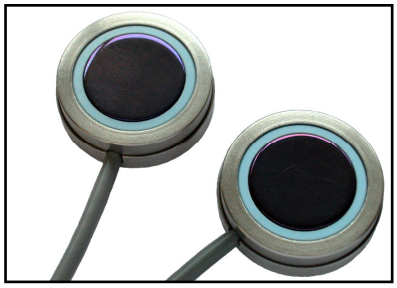

Fig. 1 Internal circuit and image of EPIC ECG Sensor

Plessey Semiconductors Ltd.
Design & Technology Centre, Delta 500, Delta Business Park, Great Western Way, Swindon, UK SN5 7XE
Tel: +44 1793 518000 Fax: +44 1793 518030 Web: www.plesseysemi.com

ELECTRICAL CHARACTERISTICS

T_{amb} = 0℃ to +50℃, V_{dd} = +5v. The electrical characteristics are guaranteed by either production test or by design and characterisation. They apply within the specified ambient temperature and supply voltage unless otherwise stated.

Characteristics	Value			Units	Conditions
	Min.	Typ.	Max.		
Supply (Vdd)	+4.75	5.00	8.0		Unipolar (Vss=0v)
Supply current		4.5		mA	@Vdd=5.0V
Voltage Gain (Av)		50			Peak-to-peak
Effective input resistance (Rine)		20		GΩ	
Effective input capacitance (Cine)		15		pF	
Coupling capacitance		1		nF	Sensor to skin
Lower -3dB point		100		mHz	Set by internal DC signal rejection network – coupling capacitor 1nF
Upper -3dB point		10		kHz	
Noise		tbd			
Output voltage swing	-2.4		2.4	V	Output signal can swing negative and positive and is centred on 0V

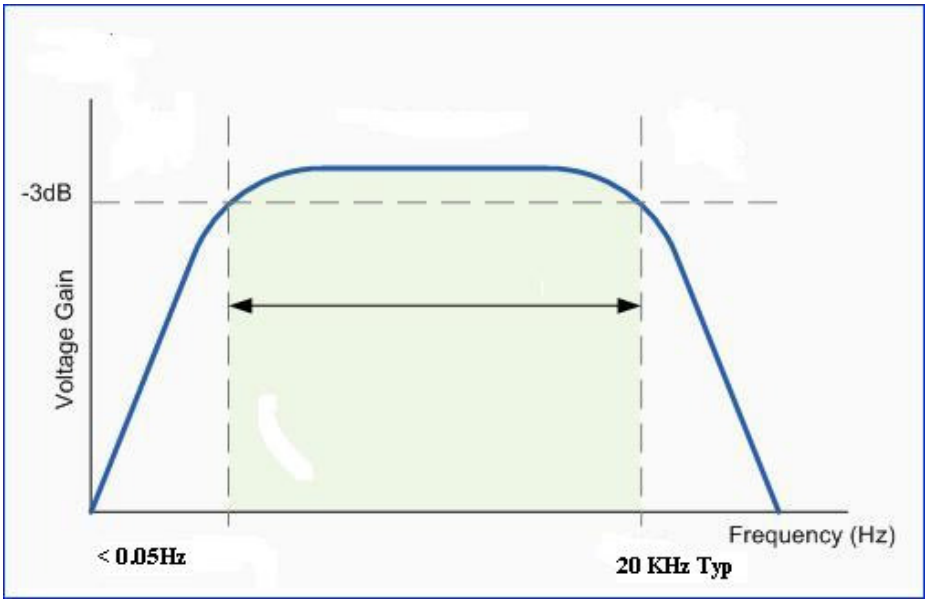

Fig. 2 Typical Bode Plot for EPIC ECG Sensor

Plessey Semiconductors Ltd.
Design & Technology Centre, Delta 500, Delta Business Park, Great Western Way, Swindon, UK SN5 7XE
Tel: +44 1793 518000 Fax: +44 1793 518030 Web: www.plesseysemi.com

4 PIN DIN PLUG TERMINATION

Pin1 Signal Out (Yellow)
Pin2 Earth (Green)
Pin3 +6V (Red)
Pin4 0V (Blue)

APPLICATION OF THE ECG SENSOR

Because of the large coupling capacitance to the body (around 1nF) the EPIC sensor's internal electrometer can be used in differential mode to recover true surface potential ECG signals from the surface of the skin.

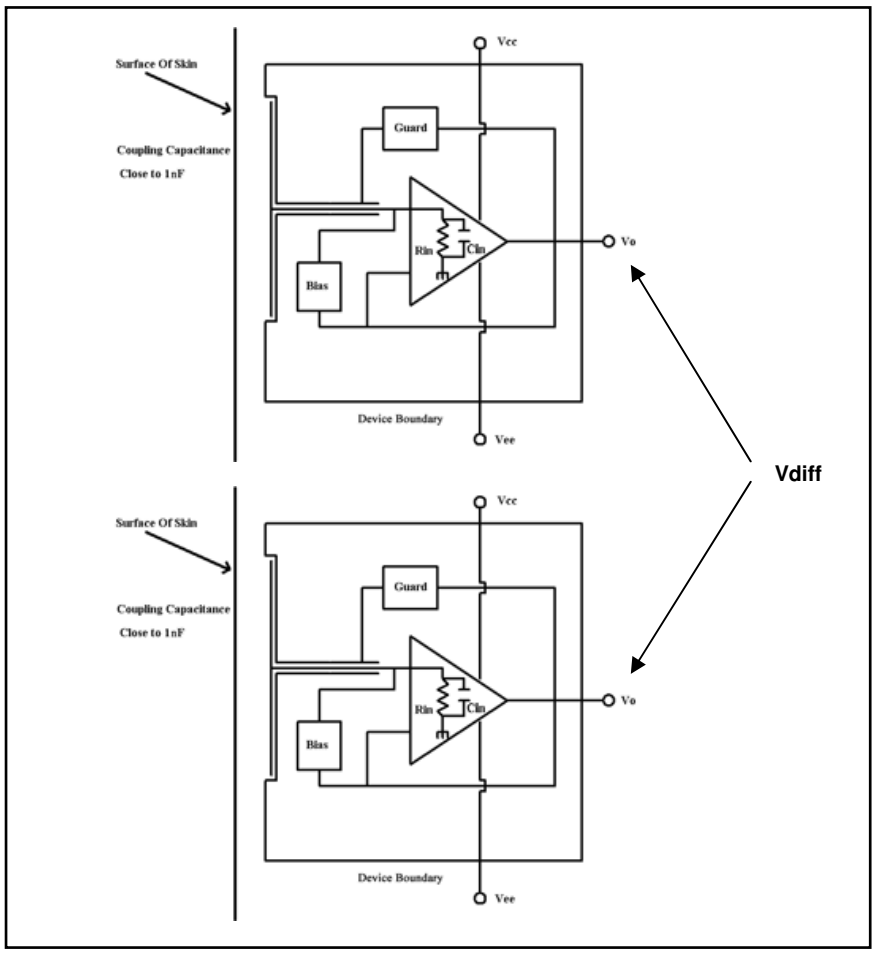

Fig. 3 Differential measurement of body (skin) surface potential to produce ECG trace

Plessey Semiconductors Ltd.
Design & Technology Centre, Delta 500, Delta Business Park, Great Western Way, Swindon, UK SN5 7XE
Tel: +44 1793 518000 Fax: +44 1793 518030 Web: www.plesseysemi.com

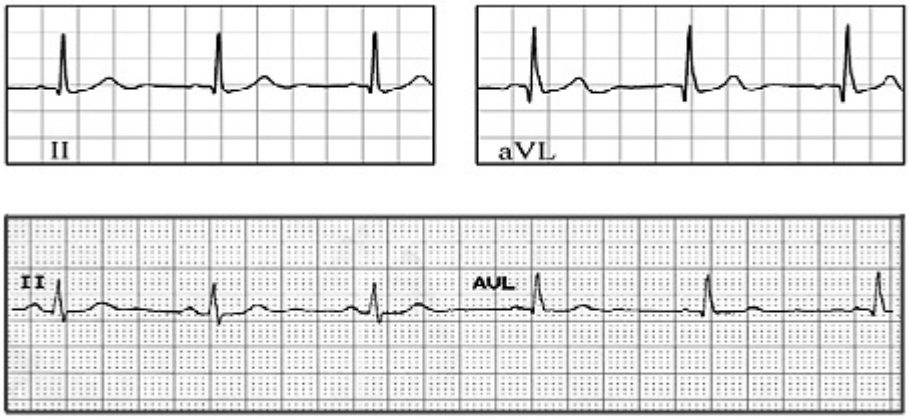

Fig. 4 Comparison of two ECG vectors from a pair of EPIC sensors (top) and two conventional Ag/AgCl electrodes (bottom)

PATENTS

This component and many of the associated applications are covered by the following international patents:

602 32 911.6-08 (DE)
AU2007228660
CA2646411
CN200780026584.8
EP1451595 (CH)
EP1451595 (ES)
EP1451595 (FR)
EP1451595 (IE)
EP1451595 (IT)
EP1451595 (NL)
EP2002273
EP2047284
EP2174416
GB1118970.1
JP2009-500908
JP4391823
TW097126903
TW1308066
US12/293872
US12/374359
US12/669615
US13/020890
US13/163988
US788570

Plessey Semiconductors Ltd.
Design & Technology Centre, Delta 500, Delta Business Park, Great Western Way, Swindon, UK SN5 7XE
Tel: +44 1793 518000 Fax: +44 1793 518030 Web: www.plesseysemi.com

For further information about this and other products, please visit: www.plesseysemiconductors.com

Legal Notice

Product information provided by Plessey Semiconductors Limited ("Plessey") in this document is believed to be correct and accurate. Plessey reserves the right to change/correct the specifications and other data or information relating to products without notice but Plessey accepts no liability for errors that may appear in this document, howsoever occurring, or liability arising from the use or application of any information or data provided herein. Neither the supply of such information, nor the purchase or use of products conveys any licence or permission under patent, copyright, trademark or other intellectual property right of Plessey or third parties.

Products sold by Plessey are subject to its standard Terms and Conditions of Sale that are available on request. No warranty is given that products do not infringe the intellectual property rights of third parties, and furthermore, the use of products in certain ways or in combination with Plessey, or non-Plessey furnished equipments/components may infringe intellectual property rights of Plessey.

The purpose of this document is to provide information only and it may not be used, applied or reproduced (in whole or in part) for any purpose nor be taken as a representation relating to the products in question. No warranty or guarantee express or implied is made concerning the capability, performance or suitability of any product, and information concerning possible applications or methods of use is provided for guidance only and not as a recommendation. The user is solely responsible for determining the performance and suitability of the product in any application and checking that any specification or data it seeks to rely on has not been superseded.

Products are intended for normal commercial applications. For applications requiring unusual environmental requirements, extended temperature range, or high reliability capability (e.g. military, or medical applications), special processing/testing/conditions of sale may be available on application to Plessey.

Data Sheet 291346 Issue 2

Plessey Semiconductors Ltd.
Design & Technology Centre, Delta 500, Delta Business Park, Great Western Way, Swindon, UK SN5 7XE
Tel: +44 1793 518000 Fax: +44 1793 518030 Web: www.plesseysemi.com